- Increases piston speeds, super sensitive diaphragm
- Extremely low operating differential
- Virtually stiction free
- May be used as differential shuttle valve
- High temperature option

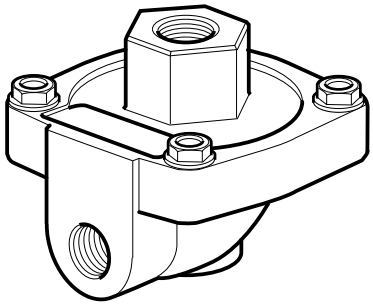

Operating information

Operating pressure:	0,2 to 10 bar
Operating temperature (Standard):	-10°C to +80°C
Operating temperature (High):	-10°C to +180°C
Body material:	Aluminium
Diaphragm material (Standard):	Nitrile
Diaphragm material (High):	Viton

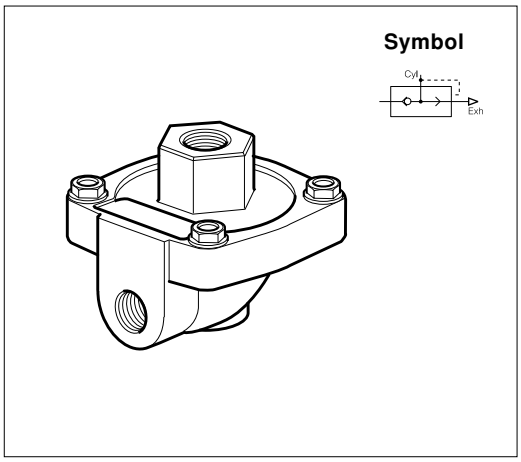

Standard version

Port Size	Cv Rating	Weight kg	Order Code
G1/4	2,3	0,20	**P4Q-BA12**
G3/8	3,6	0,18	**P4Q-BA13**
G1/2	6,6	0,50	**P4Q-CA14**
G3/4	7,3	0,44	**P4Q-CA16**

High temperature version

Port Size	Cv Rating	Weight kg	Order Code
G1/4	2,3	0,20	**P4Q-BV12**
G3/8	3,6	0,18	**P4Q-BV13**
G1/2	6,6	0,50	**P4Q-CV14**
G3/4	7,3	0,44	**P4Q-CV16**

Quick Exhaust Valves - Dimensions

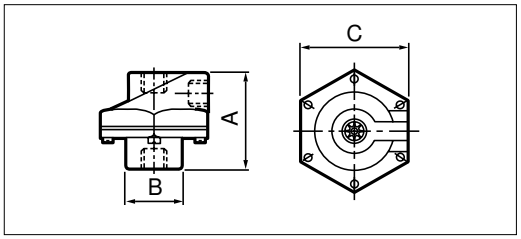

Order code	Port Size	A	B	C
P4Q-B*12	G1/4	52	25	62
P4Q-B*13	G3/8	52	25	62
P4Q-B*14	G1/2	73	38	86
P4Q-B*16	G3/4	73	38	86